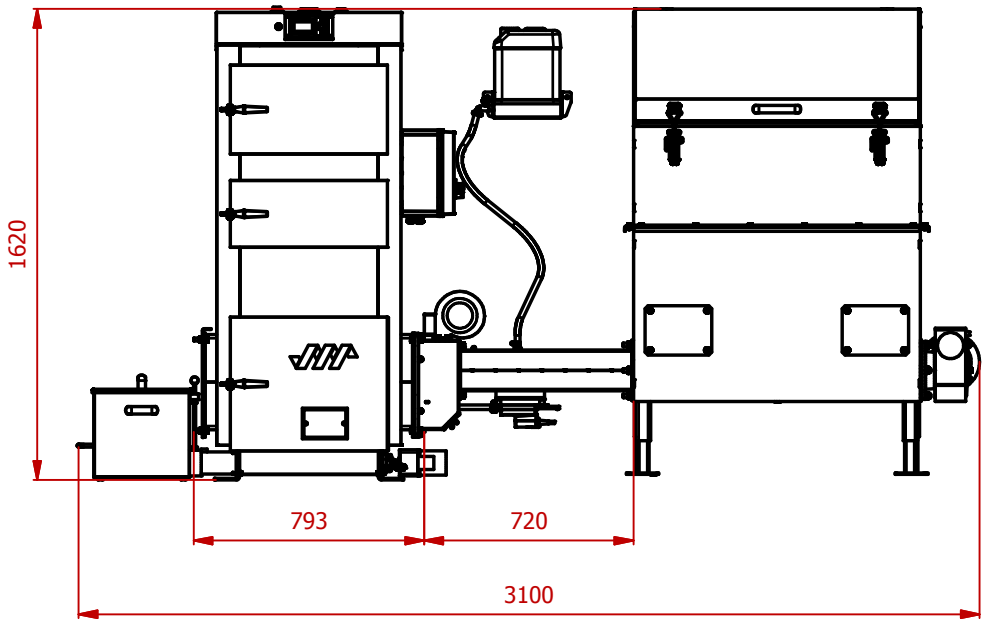

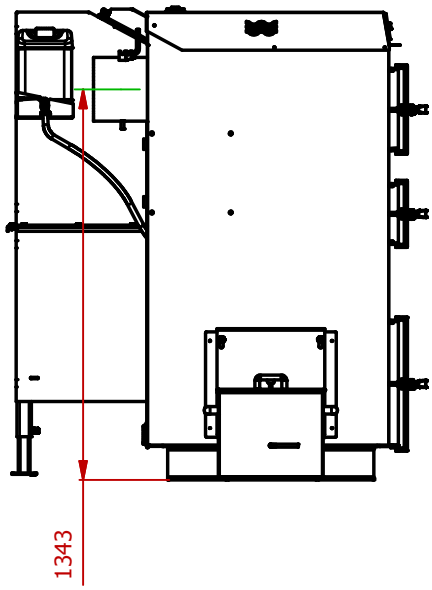

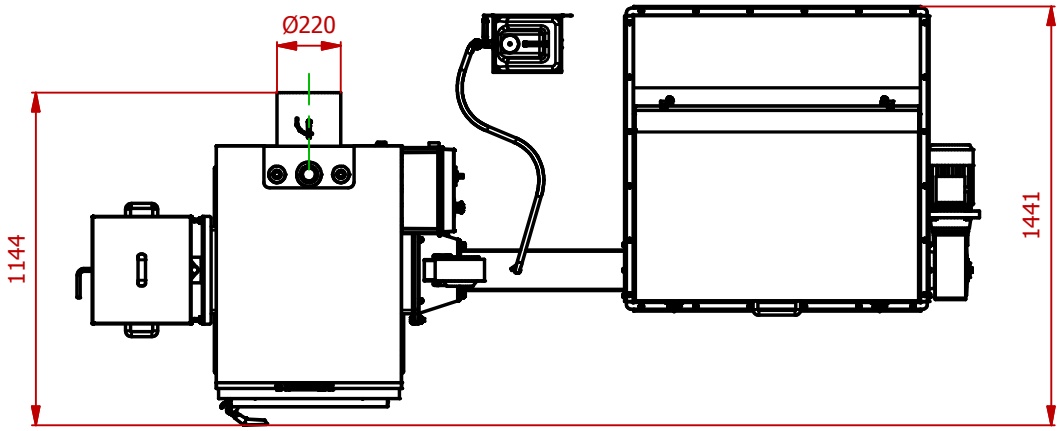

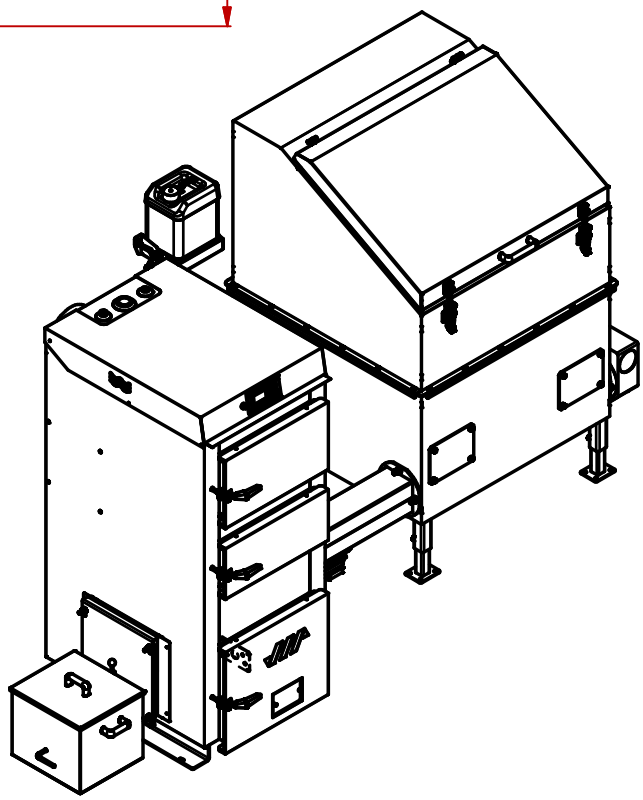

VM50+SUP+1m3