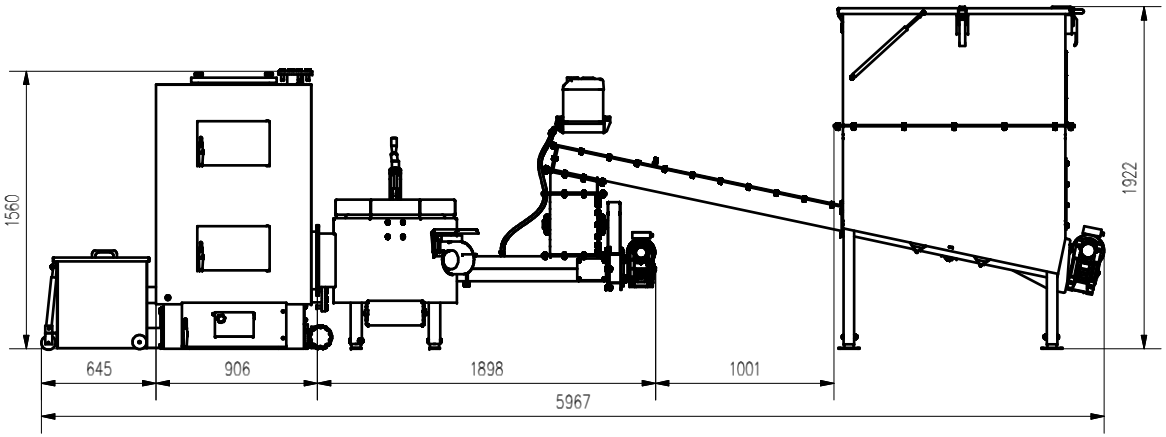

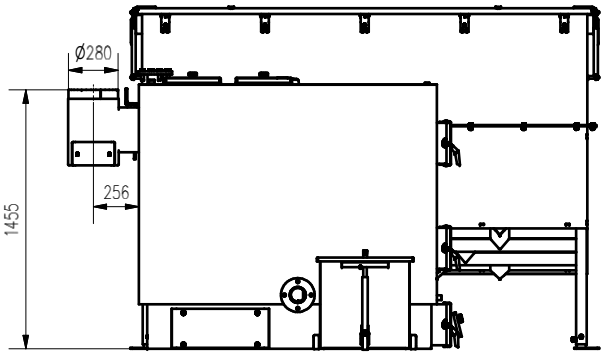

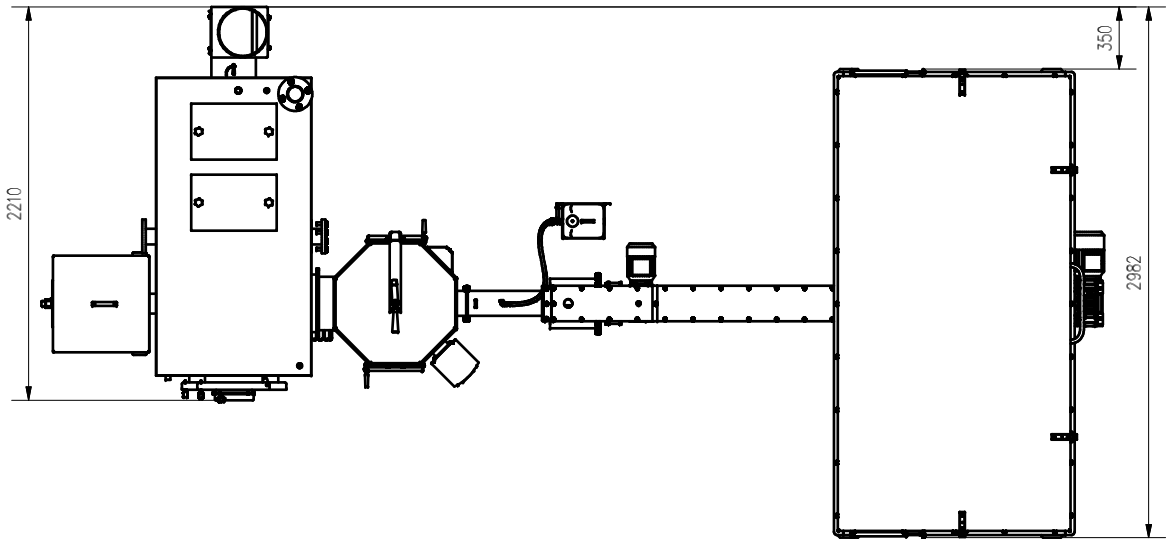

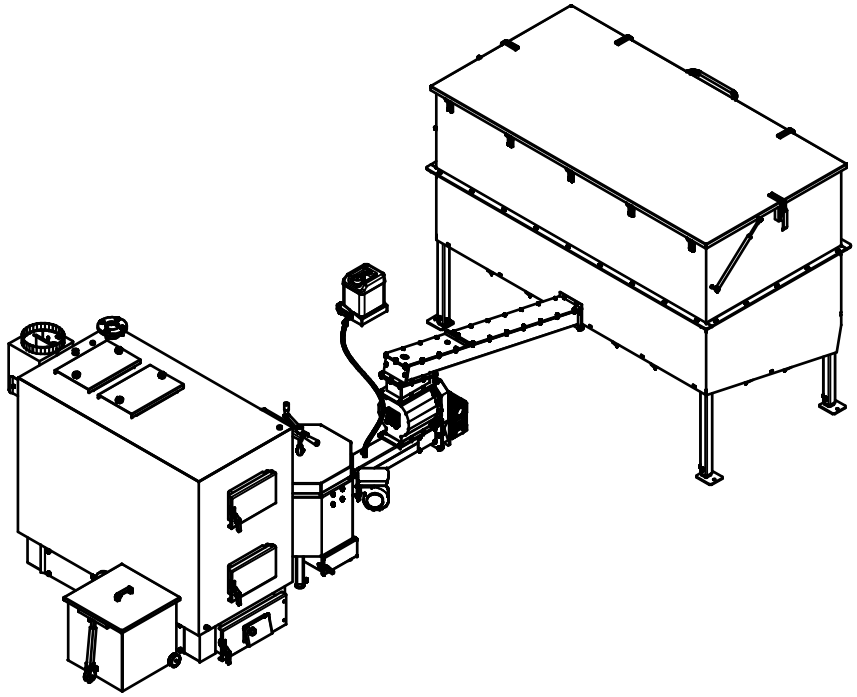

AZSB100GC 4m3 P