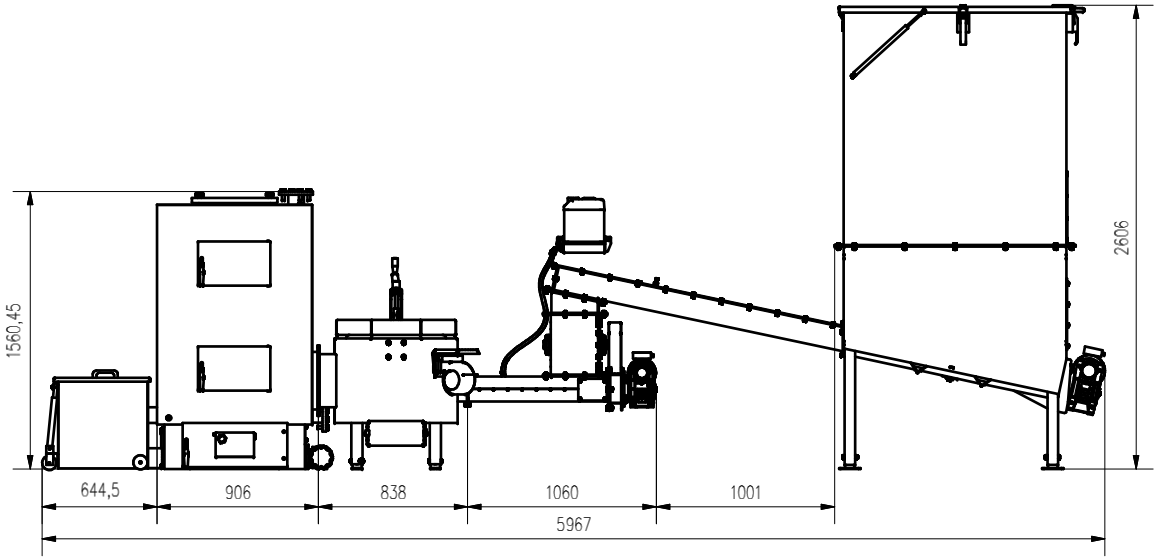

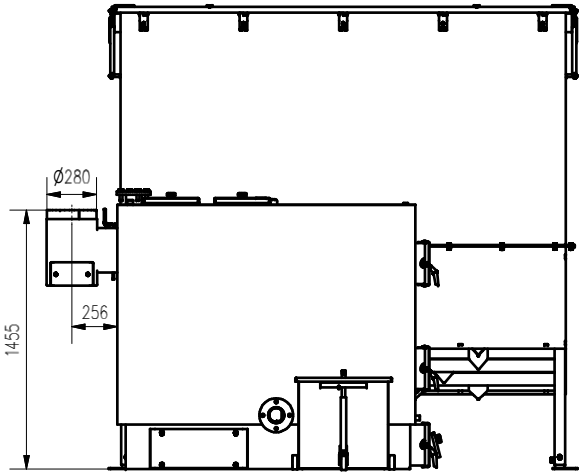

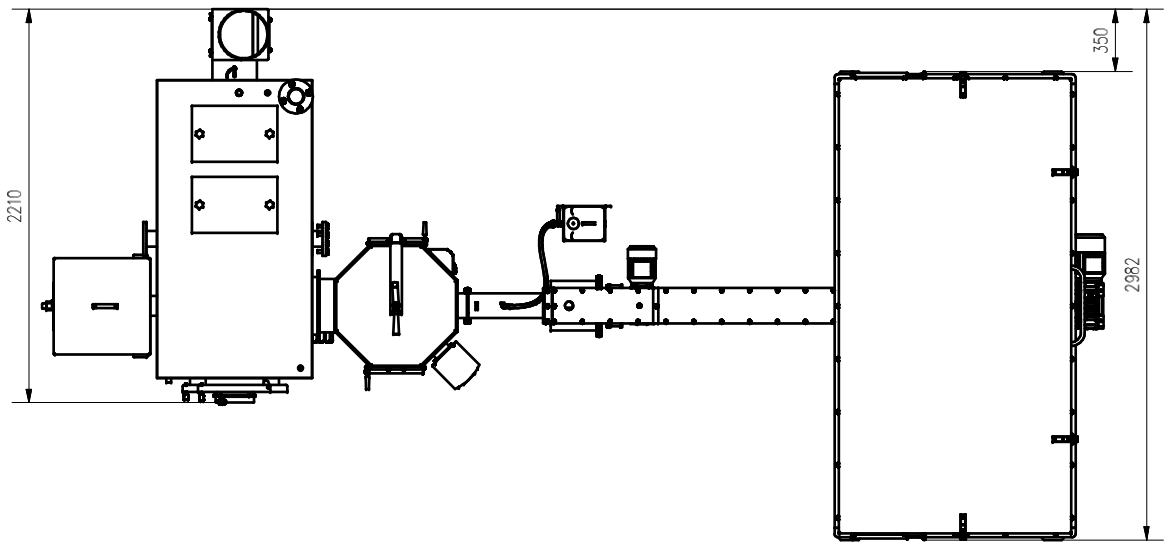

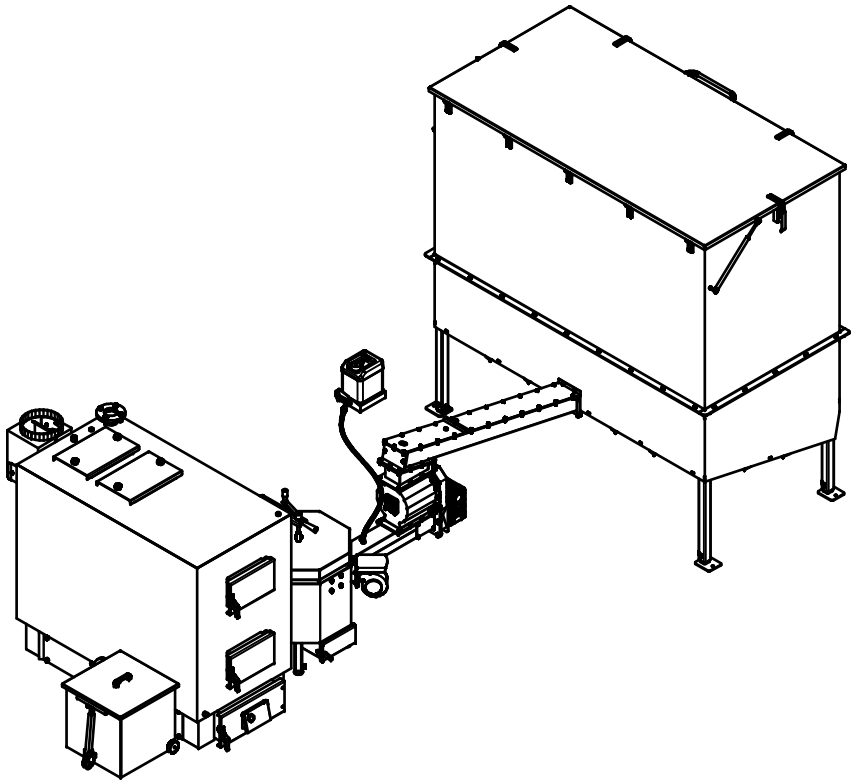

AZSB100GC 6m3 P