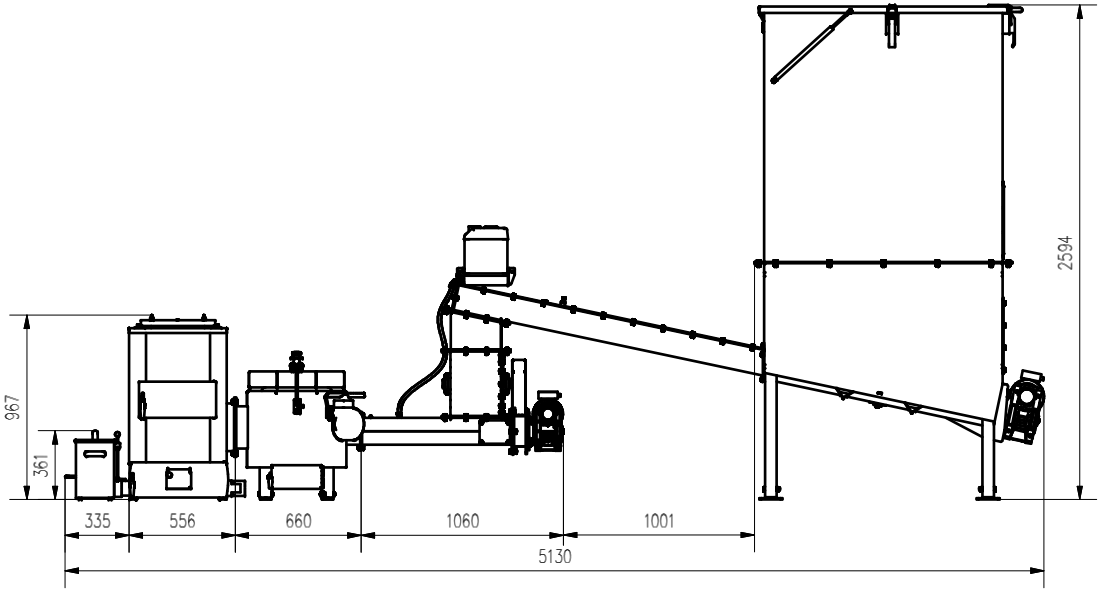

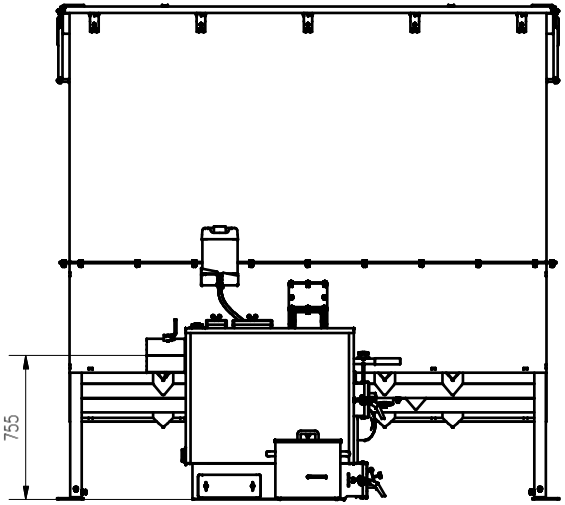

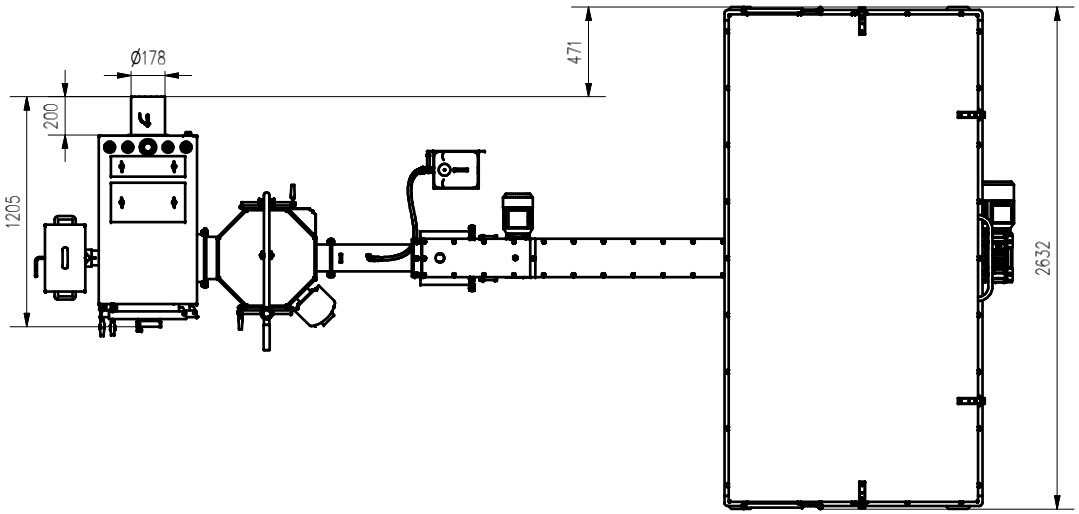

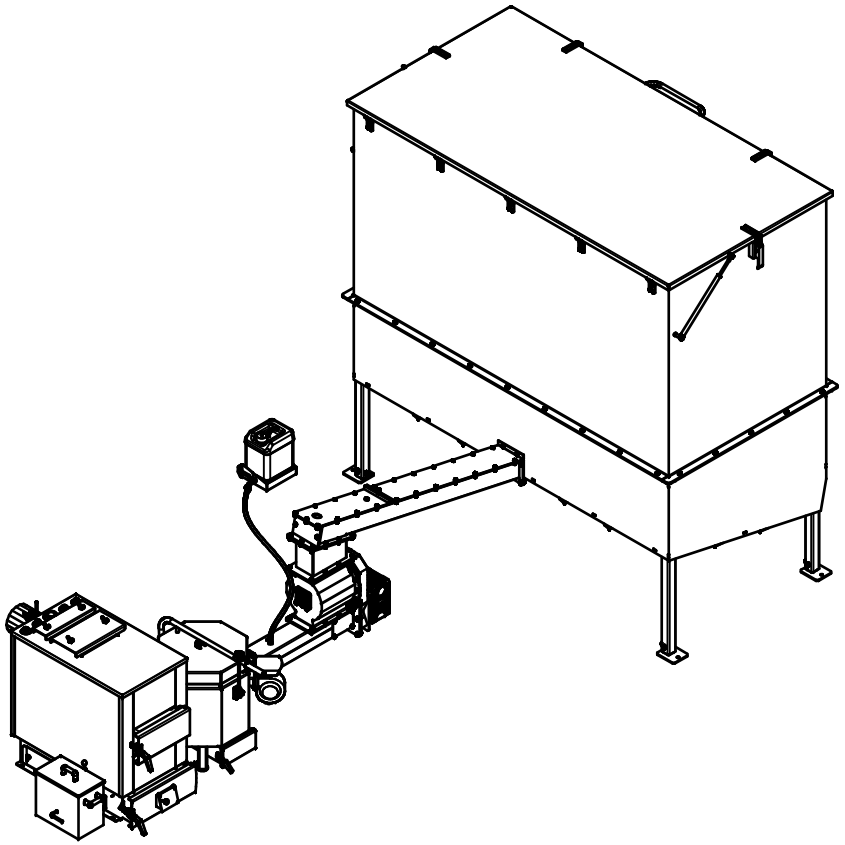

AZSB30GC 6m3 P SUP