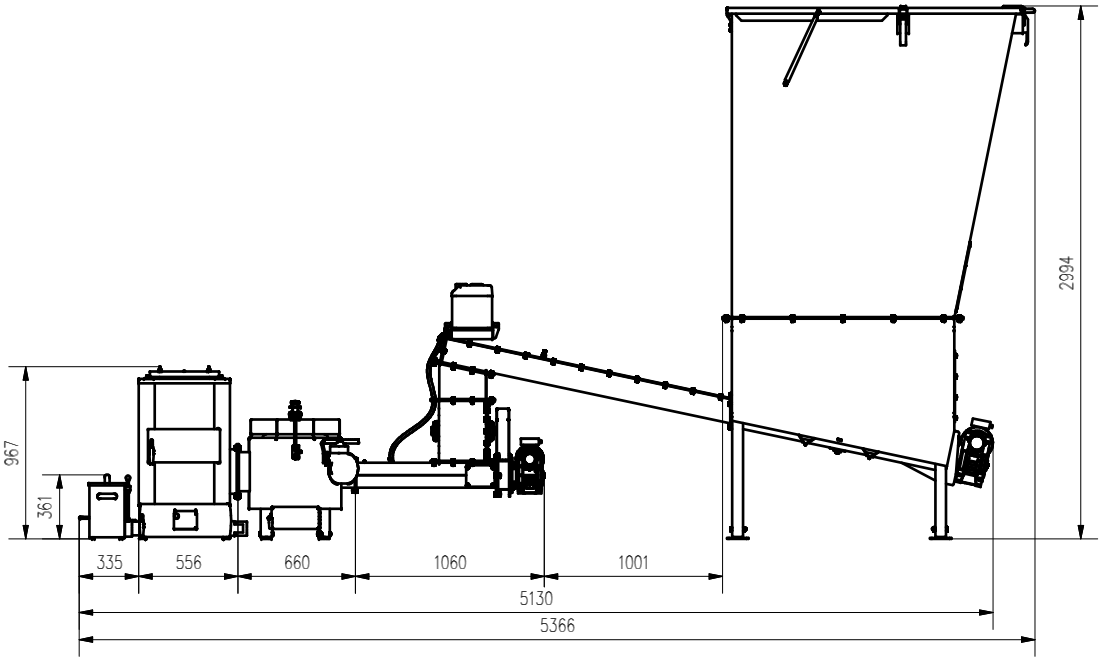

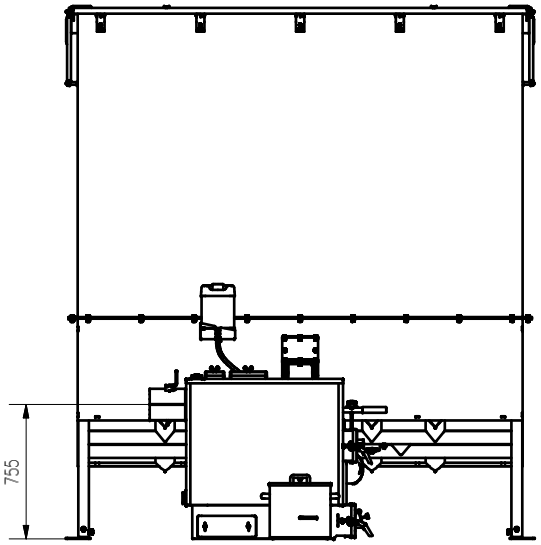

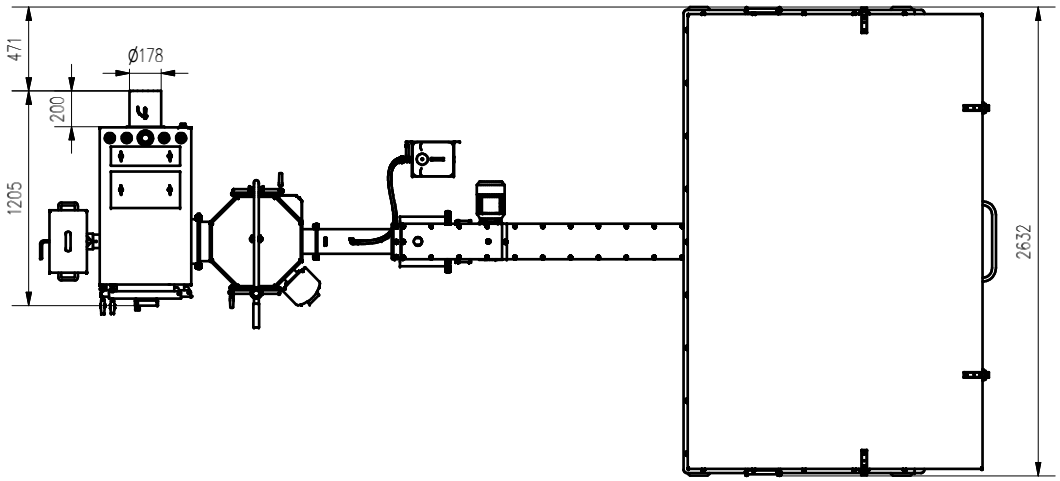

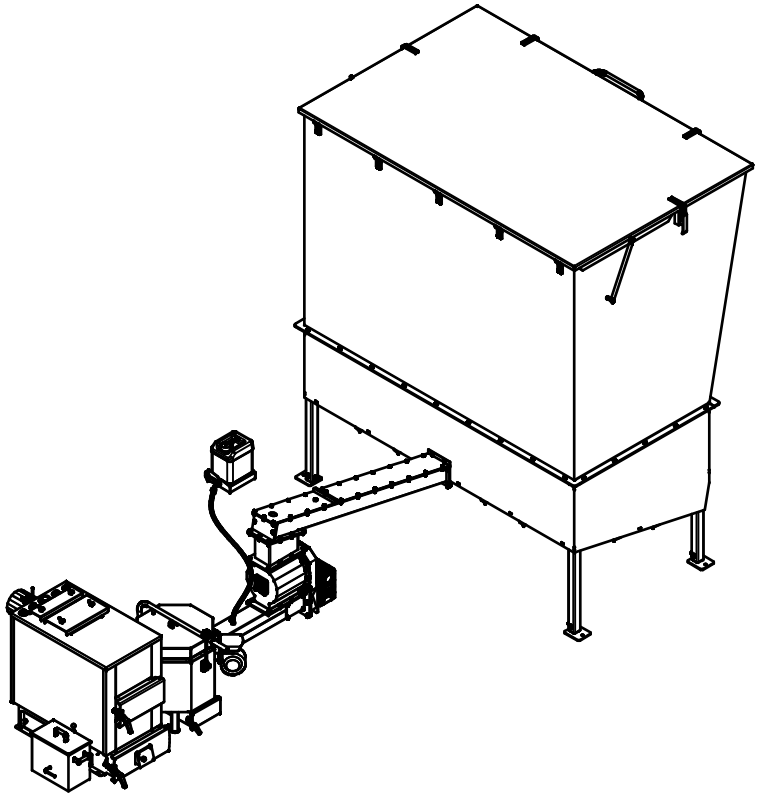

AZSB30GC 8m3 P SUP