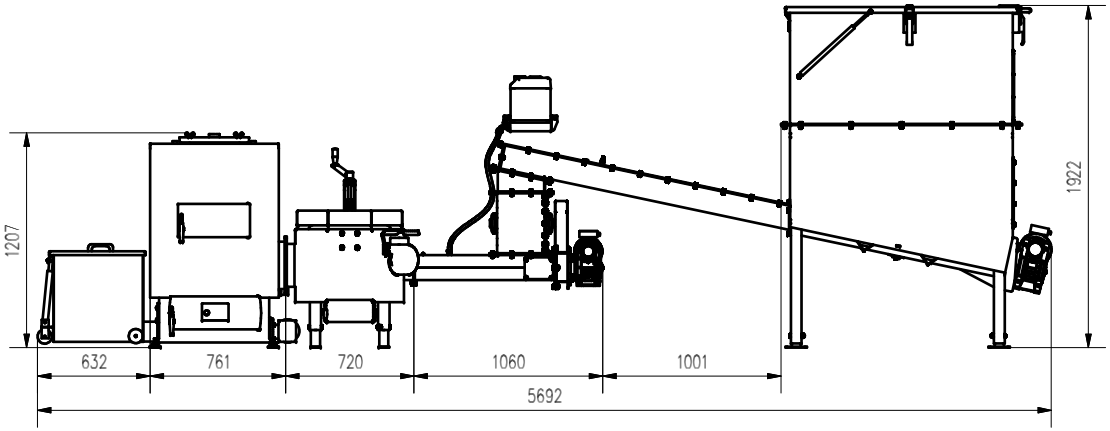

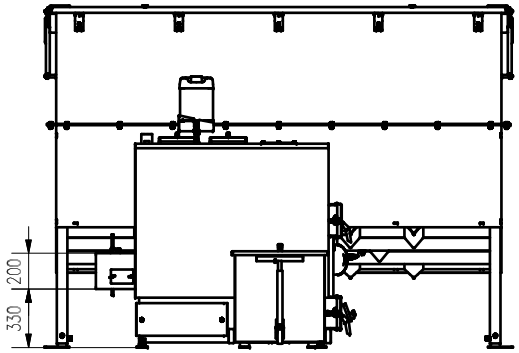

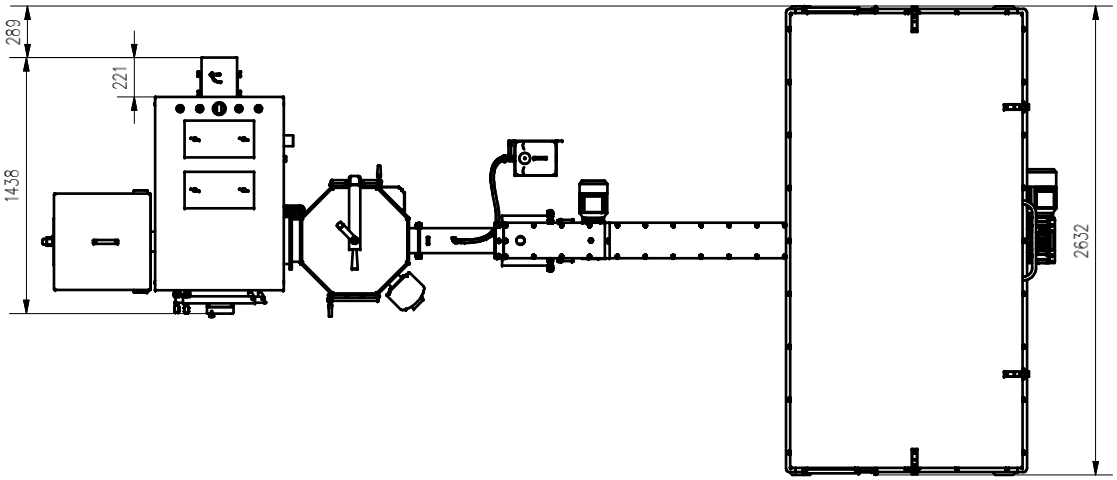

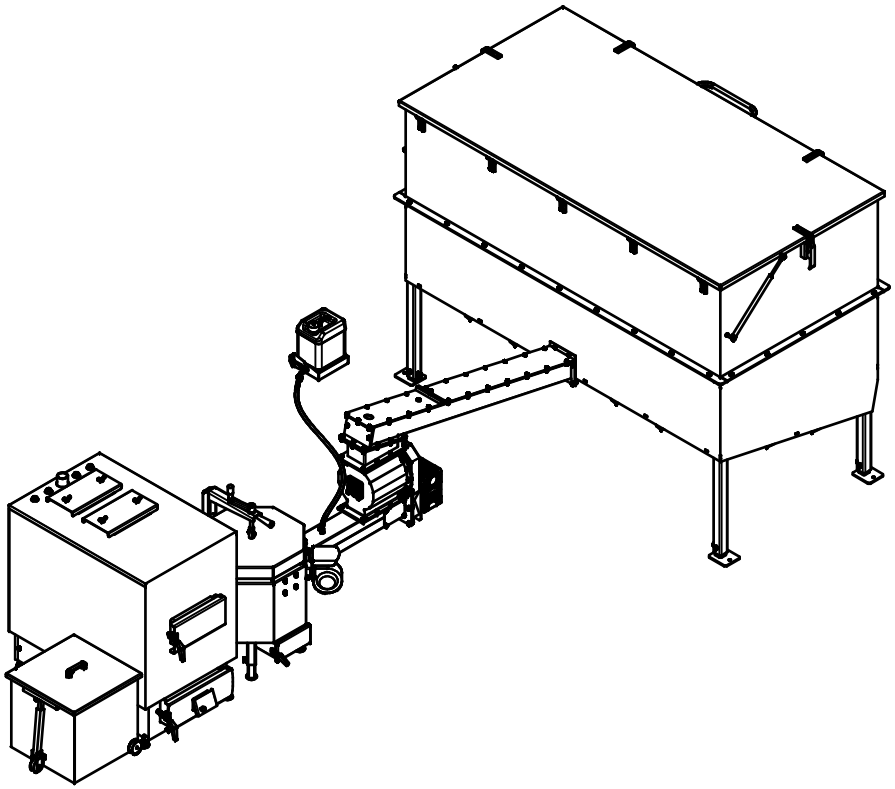

AZSB50GC 4m3 P SUP