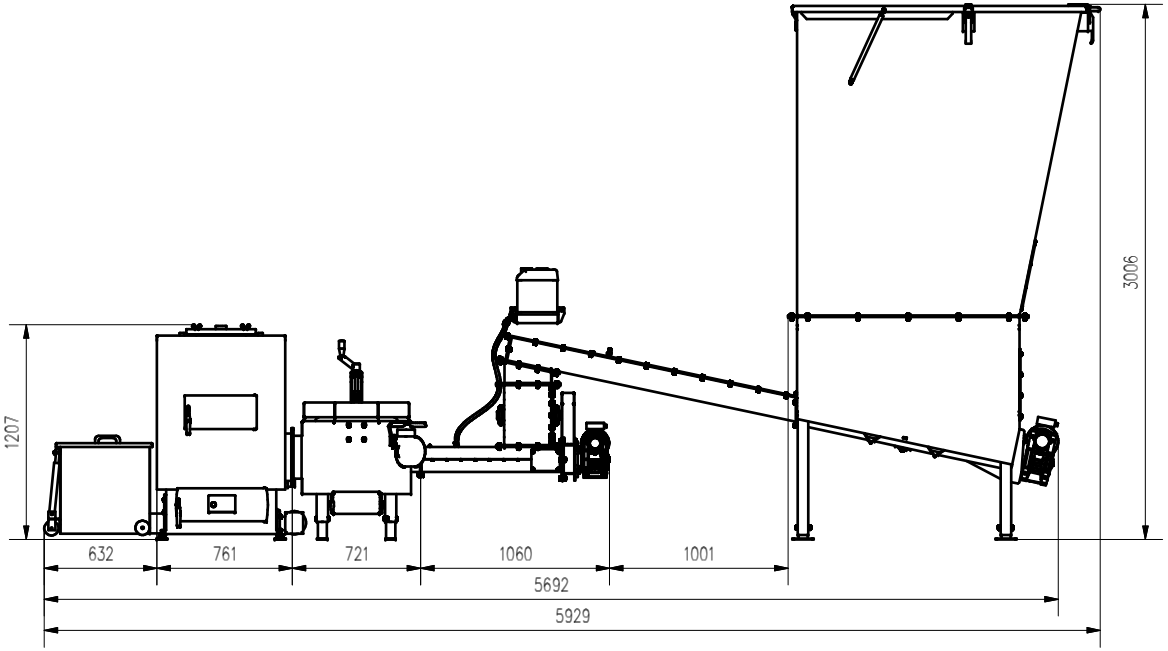

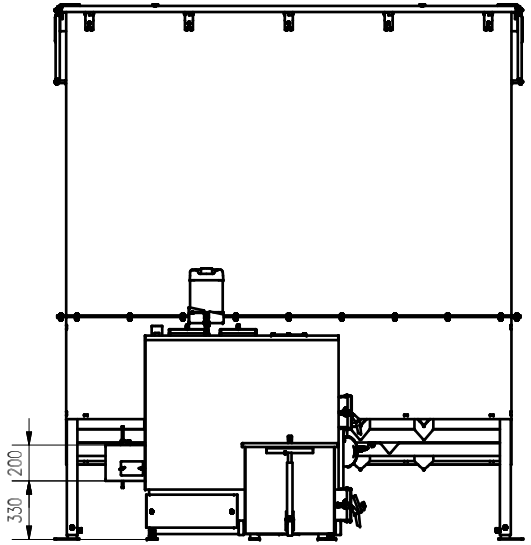

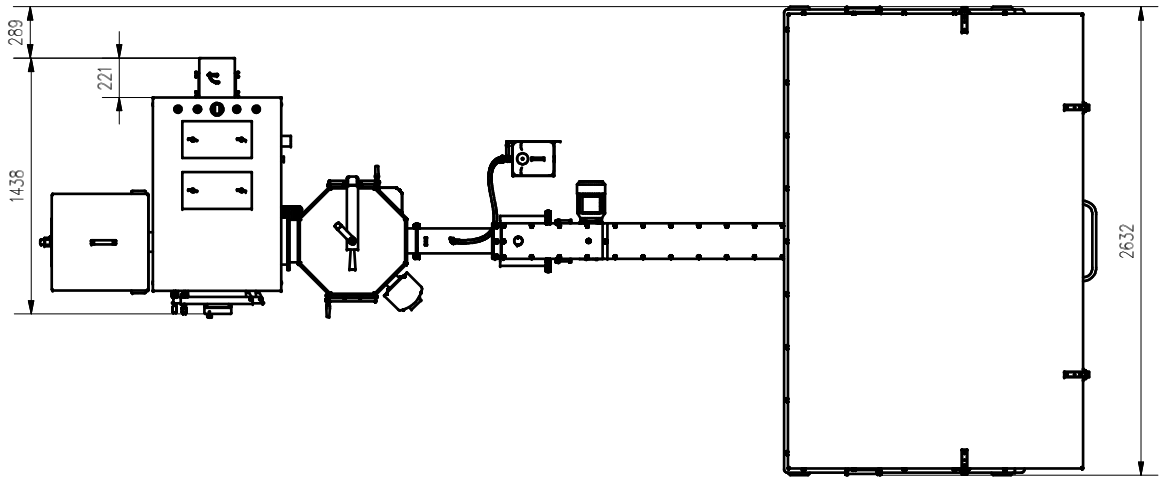

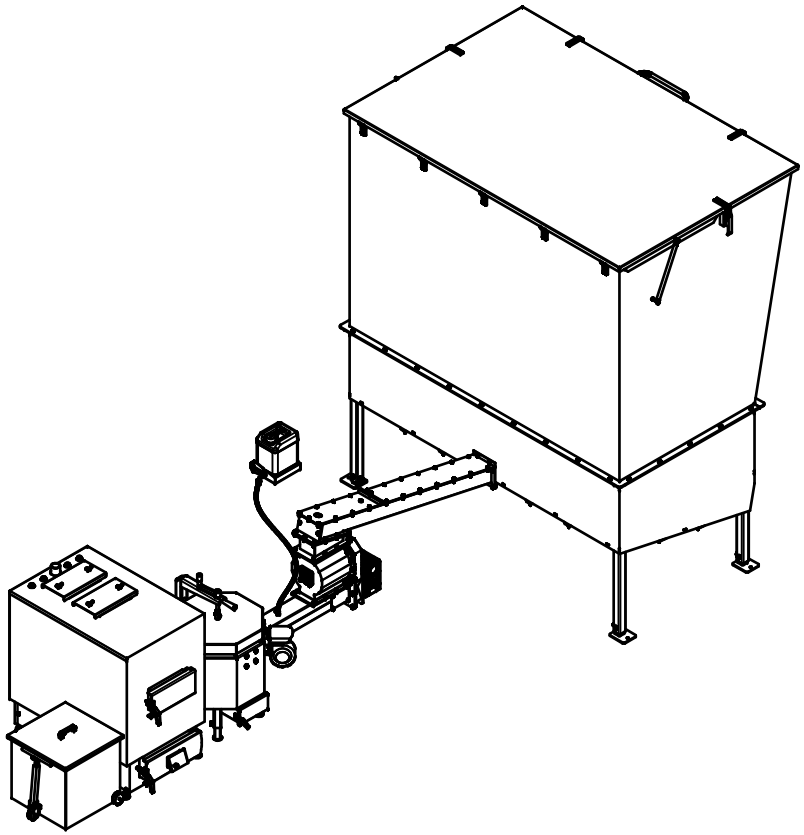

AZSB50GC 8m3 P SUP